cube icemaker

M155-65 HC DP

maidaid by BREMA Ice Makers





M155-65 HC DP Features

- **3 year warranty**
- Internally fitted drain pump as standard
- Compact and crystal cube
- AISI 304 SS Scotch Brite finish
- Tropical class +43°C
- Adjustable Stainless Steel feet
- Air cooling system
- Easy cleanable internal rounded surfaces
- HCFC-Free insulated storage
- RoHS Free
- Disappearing insulated door
- Soft touch control button
- HFC Free

Available ice cube size

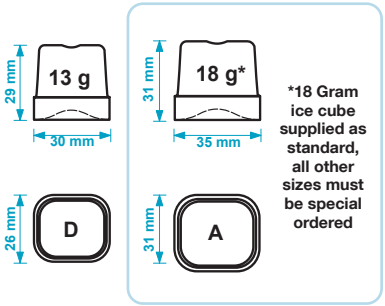

*18 Gram ice cube supplied as standard, all other sizes must be special ordered



AISI 304 SS Scotch Brite finish


Adjustable Stainless Steel feet


Easy cleanable internal rounded surfaces


Disappearing insulated door

Self-contained ice maker – Sprayer system

Daily production up to **155 kg**

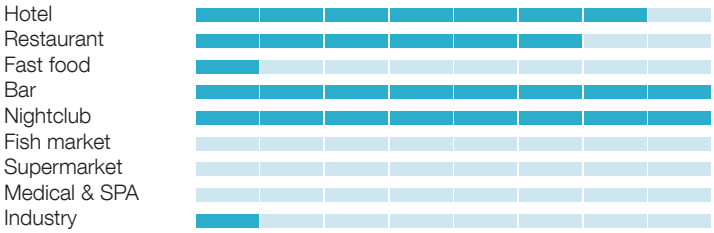

Prod. 24	Air temp.		Water temp.		kg	lbs
	10°C	50°F	7°C	45°F	155	342
	21°C	70°F	15°C	60°F	152	335

For additional information contact our Sales Team on

T: **0345 130 8070** E: **sales@maidaid-halcyon.co.uk** or visit **www.maidaid.co.uk**

Maidaid reserve the right to alter specifications & dimensions without prior notification, all dimensions will be +/- 3mm.

cube icemaker

M155-65 HC DP



maidaid by BREMA Ice Makers

Working Conditions

• Location: **Indoor**	**Min**	**Max**
Ambient temperature	+10°C / +50°F	+43°C / 110°F
Water temperature	+3°C / +37°F	+32°C / +90°F
Voltage	-10%	+10%
Water inlet pressure	1bar (14 psi)	6bar (84 psi)

Performances

		Water temperature					
		7°C	**45°F**	**15°C**	**60°F**	**21°C**	**70°F**
Air temperature	**10°C**	155 kg					
	50°F		342 lbs				
	21°C			152 kg			
	70°F				335 lbs		
	32°C					138 kg	
	90°F						304 lbs

Installation Diagram

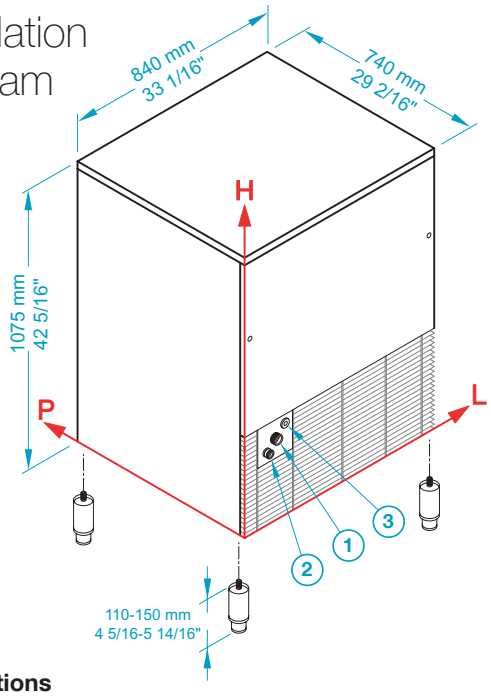

Connections

All measures are referred to the rear bottom-left corner (L-H-Ø)

1. Water in.: 141 mm / 5 9/16" - 290 mm / 11 7/16" - 3/4"
2. Water out.: 79 mm / 3 2/16" - 245 mm / 9 10/16" - 24 mm / 15/16"
3. Electrical connections: 186 mm / 7 5/16" - 326 mm / 12 13/16"

Technical Information

Production in 24h	152 kg / 335 lbs
Store capacity, up to	65 kg / 143 lbs
Cooling system	A
Kind of cube	A-18g, D-13g
Refrigerant	R290
Standard voltage	230 V ~ 50 Hz
Average power consumption	1280 W
Fuse	16 A
Electrical consumption	19 kWh/100 kg
Water consumption	A: 2 l/kg - 24 gal/100 lbs

Sizes	(L-P-H mm)	840 - 740 - 1075
	(L-P-H in)	33 1/16 - 29 2/16 - 42 5/16
Sizes with pack	(L-P-H mm)	880 - 785 - 1245
	(L-P-H in)	34 10/16 - 30 14/16 - 49
Net weight		118 kg / 260 lbs
Gross weight		138 kg / 304 lbs
Finish		AISI 304 stainless steel, scotch brite

All the technical information must be considered at the following conditions:

- Sizes without feet
- Standard Cube (18g)
- Ambient temperature +21°C
- Water temperature +15°C
- Electrical consumption at +32°C (standard voltage)
- Average power consumption at +43°C (standard voltage)

For additional information contact our Sales Team on

T: **0345 130 8070** E: **sales@maidaid-halcyon.co.uk** or visit **www.maidaid.co.uk**

Maidaid reserve the right to alter specifications & dimensions without prior notification, all dimensions will be +/- 3mm.