granular icemaker

MF90-20 HC

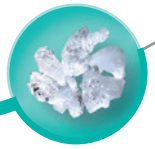

maidaid by BREMA Ice Makers



MF90-20 HC Features

- **12 months warranty**
- Granular ice - 80-82% dry
- AISI 304 SS Scotch Brite finish
- Tropical class +43°C
- Adjustable Stainless Steel feet
- Removable and cleanable air filter
- AISI 304 SS evaporator
- Air or water cooling system
- Easy cleanable internal rounded surfaces
- HCFC-Free insulated storage
- Dust-proof water basin
- RoHS Free
- Disappearing insulated door
- Electromechanical operation
- ON-OFF rocker switch
- Automatic water charge
- HFC Free



AISI 304 SS Scotch Brite finish


Removable and cleanable air filter


AISI 304 SS evaporator


Dust-proof water basin


Disappearing insulated door

Self-contained ice maker – Granular system

Daily production up to 125 kg

Hotel	■■■■■
Restaurant	■■■
Fast food	■
Bar	■
Nightclub	■■■
Fish market	■■■■■■
Supermarket	■■■■■■■■
Medical & SPA	■■■■■■■■
Industry	■■■■■■

Prod. 24	Air temp.		Water temp.		kg	lbs
	10°C	50°F	7°C	45°F	125	276
	21°C	70°F	15°C	60°F	100	249

For additional information contact our Sales Team on

T: **0345 130 8070** E: **sales@maidaid-halcyon.co.uk** or visit **www.maidaid.co.uk**

Maidaid reserve the right to alter specifications & dimensions without prior notification, all dimensions will be +/- 3mm.

granular icemaker

MF90-20 HC



maidaid by BREMA Ice Makers

Working Conditions

• Location: **Indoor**	**Min**	**Max**
Ambient temperature	+10°C / +50°F	+43°C / 110°F
Water temperature	+3°C / +37°F	+32°C / +90°F
Voltage	-10%	+10%
Water inlet pressure	1bar (14 psi)	6bar (84 psi)

Performances

		Water temperature					
		7°C	**45°F**	**15°C**	**60°F**	**21°C**	**70°F**
Air temperature	**10°C**	125 kg					
	50°F		246 lbs				
	21°C			100 kg			
	70°F				214 lbs		
	32°C					93 kg	
	90°F						205 lbs

Installation Diagram

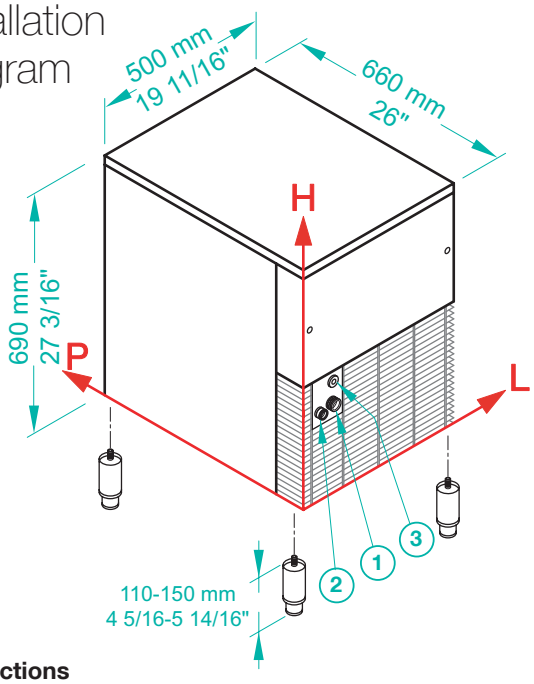

Connections

All measures are referred to the rear bottom-left corner (L-H-Ø)

1. Water in.: 99 mm / 3 14/16" - 158 mm / 6 4/16" - 3/4"
2. Water out.: 48 mm / 1 14/16" - 151 mm / 5 15/16" - 24 mm / 15/16"
3. Electrical connections: 87 mm / 3 7/16" - 230 mm / 9 1/16"

Technical Information

Production in 24h	100 kg / 249 lbs
Store capacity, up to	20 kg / 44 lbs
Cooling system	A - W
Refrigerant	R290
Standard voltage	230 V ~ 50 Hz
Average power consumption	470 W
Fuse	10 A
Electrical consumption	11 kWh/100kg
Water consumption	A: 1 l/kg - 12.0 gal/100 lbs W: 7 l/kg - 84 gal/100 lbs

Sizes	(L-P-H mm)	500 - 660 - 690
	(L-P-H in)	19 11/16 - 26 - 27 3/16
Sizes with pack	(L-P-H mm)	550 - 720 - 880
	(L-P-H in)	21 10/16 - 28 6/16 - 34 10/16
Net weight		59 kg / 130 lbs
Gross weight		67 kg / 148 lbs
Finish		AISI 304 stainless steel, scotch brite

All the technical information must be considered at the following conditions:

- Sizes without feet
- Ambient temperature +21°C
- Water temperature +15°C
- Electrical consumption at +32°C (standard voltage)
- Average power consumption at +43°C (standard voltage)

For additional information contact our Sales Team on

T: **0345 130 8070** E: **sales@maidaid-halcyon.co.uk** or visit **www.maidaid.co.uk**

Maidaid reserve the right to alter specifications & dimensions without prior notification, all dimensions will be +/- 3mm.