cube icemaker

M34-16 HC



maidaid by BREMA Ice Makers



M34-16 HC Features

- **3 year warranty**
- Compact and crystal cube
- AISI 304 SS Scotch Brite finish
- Tropical class +43°C
- Adjustable Stainless Steel feet
- Removable and cleanable air filter
- Air or water cooling system
- Easy cleanable internal rounded surfaces
- HCFC-Free insulated storage
- RoHS Free
- Disappearing insulated door
- Soft touch power button
- HFC Free
- Automatic Washing system

Available ice cube size

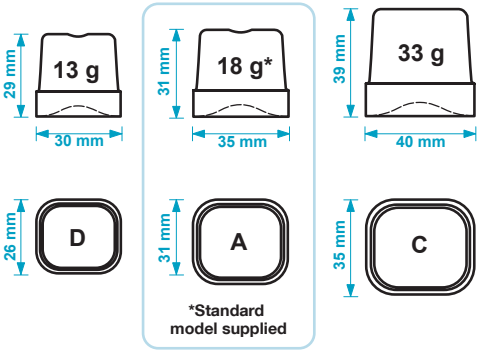

*Standard model supplied



AISI 304 SS Scotch Brite finish


Removable and cleanable air filter


Adjustable Stainless Steel feet


Disappearing insulated door

Self-contained ice maker – Sprayer system

Daily production up to **42 kg**

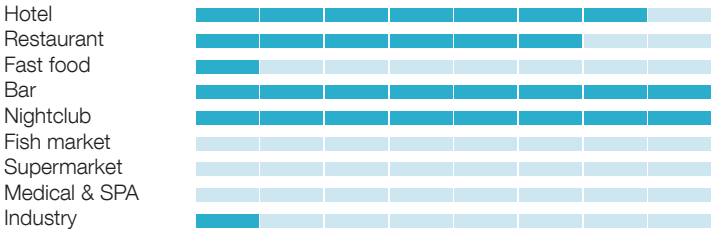

Prod. 24	Air temp.		Water temp.		kg	lbs
	10°C	50°F	7°C	45°F	42	93
	21°C	70°F	15°C	60°F	38	84

For additional information contact our Sales Team on

T: **0345 130 8070** E: **sales@maidaid-halcyon.co.uk** or visit **www.maidaid.co.uk**

Maidaid reserve the right to alter specifications & dimensions without prior notification, all dimensions will be +/- 3mm.

cube icemaker

M34-16 HC



maidaid by BREMA Ice Makers

Working Conditions

• Location: **Indoor**	**Min**	**Max**
Ambient temperature	+10°C / +50°F	+43°C / 110°F
Water temperature	+3°C / +37°F	+32°C / +90°F
Voltage	-10%	+10%
Water inlet pressure	1bar (14 psi)	6bar (84 psi)

Performances

		Water temperature					
		7°C	**45°F**	**15°C**	**60°F**	**21°C**	**70°F**
Air temperature	**10°C**	42 kg					
	50°F		93 lbs				
	21°C			38 kg			
	70°F				84 lbs		
	32°C					30 kg	
	90°F						66 lbs

Installation Diagram

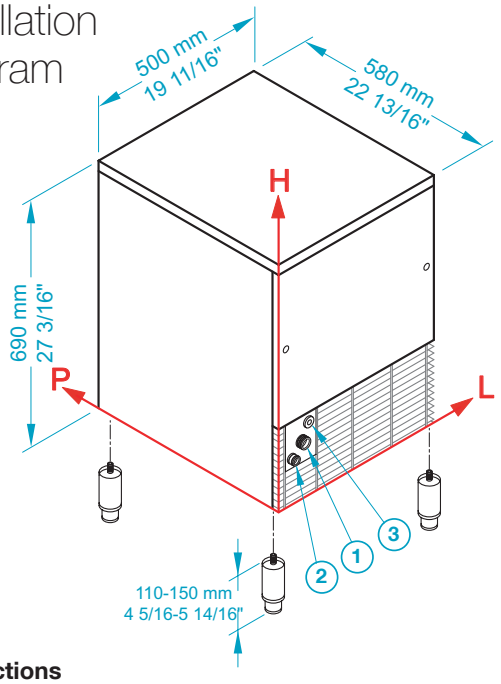

Connections

All measures are referred to the rear bottom-left corner (L-H-Ø)

1. Water in.: 111 mm / 4 6/16" - 196 mm / 7 11/16" - 3/4"
2. Water out.: 49 mm / 1 15/16" - 151 mm / 5 15/16" - 24 mm / 15/16"
3. Electrical connections: 156 mm / 6 2/16" - 232 mm / 9 2/16"

Technical Information

Production in 24h	38 kg / 84 lbs
Store capacity, up to	16 kg / 35 lbs
Cooling system	A - W
Kind of cube	A-18g, C-33g, D-13g
Refrigerant	R290
Standard voltage	230 V ~ 50 Hz
Average power consumption	340 W
Fuse	10 A
Electrical consumption	22 kWh/100 kg
Water consumption	A: 3 l/kg - 36 gal/100 lbs W: 11 l/kg - 132 gal/100 lbs

Sizes	(L-P-H mm)	500 - 580 - 690
	(L-P-H in)	15 6/16 - 18 2/16 - 27 3/16
Sizes with pack	(L-P-H mm)	550 - 630 - 880
	(L-P-H in)	21 10/16 - 24 13/16 - 34 10/16
Net weight		48 kg / 106 lbs
Gross weight		56 kg / 123 lbs
Finish		AISI 304 stainless steel, scotch brite

All the technical information must be considered at the following conditions:

- Sizes without feet
- Standard Cube (18g)
- Ambient temperature +21°C
- Water temperature +15°C
- Electrical consumption at +32°C (standard voltage)
- Average power consumption at +43°C (standard voltage)

For additional information contact our Sales Team on

T: **0345 130 8070** E: **sales@maidaid-halcyon.co.uk** or visit **www.maidaid.co.uk**

Maidaid reserve the right to alter specifications & dimensions without prior notification, all dimensions will be +/- 3mm.