# cube icemaker

## M30-10 HC



maidaid by BREMA Ice Makers




## M30-10 HC Features

- **3 year warranty**
- Compact and crystal cube
- AISI 304 SS Scotch Brite finish
- Tropical class +43°C
- Removable and cleanable air filter
- Air or water cooling system
- Easy cleanable internal rounded surfaces
- HCFC-Free insulated storage
- RoHS Free
- Disappearing insulated door
- Soft touch power button
- HFC Free
- Automatic Washing system

## Available ice cube size

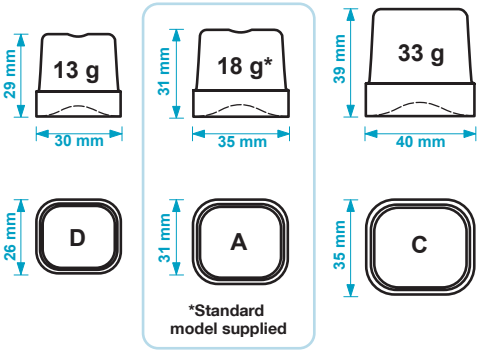




AISI 304 SS Scotch Brite finish


Removable and cleanable air filter


Easy cleanable internal rounded surfaces


Disappearing insulated door

**Self-contained ice maker – Sprayer system**

**Daily production** up to **32 kg**

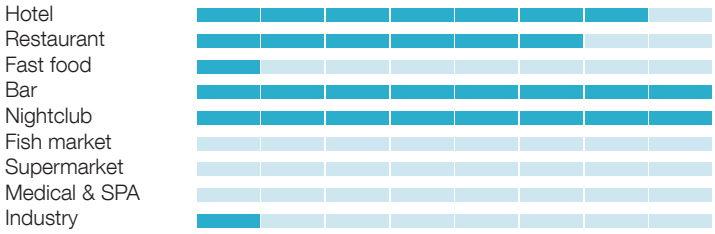


| Prod. 24 | Air temp. | | Water temp. | | kg | lbs |
|---|---|---|---|---|---|---|
| | 10°C | 50°F | 7°C | 45°F | 32 | 71 |
| | 21°C | 70°F | 15°C | 60°F | 29 | 64 |

For additional information contact our Sales Team on

T: **0345 130 8070** E: **sales@maidaid-halcyon.co.uk** or visit **www.maidaid.co.uk**

Maidaid reserve the right to alter specifications & dimensions without prior notification, all dimensions will be +/- 3mm.

# cube icemaker

## M30-10 HC



maidaid by BREMA Ice Makers

## Working Conditions

| • Location: **Indoor** | **Min** | **Max** |
|---|---|---|
| Ambient temperature | +10°C / +50°F | +43°C / 110°F |
| Water temperature | +3°C / +37°F | +32°C / +90°F |
| Voltage | -10% | +10% |
| Water inlet pressure | 1bar (14 psi) | 6bar (84 psi) |

## Performances

| | | **Water temperature** | | | | | |
|---|---|---|---|---|---|---|---|
| | | **7°C** | **45°F** | **15°C** | **60°F** | **21°C** | **70°F** |
| **Air temperature** | **10°C** | 32 kg | | | | | |
| | **50°F** | | 71 lbs | | | | |
| | **21°C** | | | 29 kg | | | |
| | **70°F** | | | | 64 lbs | | |
| | **32°C** | | | | | 24 kg | |
| | **90°F** | | | | | | 53 lbs |

## Installation Diagram

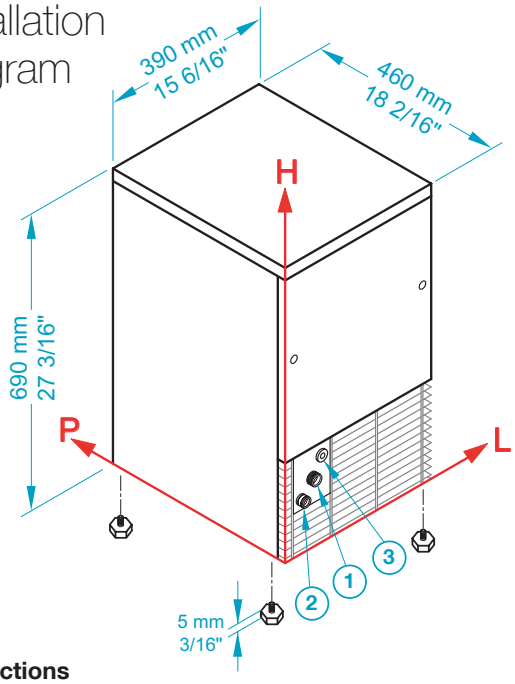


**Connections**

All measures are referred to the rear bottom-left corner (L-H-Ø)

1. Water in.: 111 mm / 4 6/16" - 175 mm / 6 14/16" - 3/4"
2. Water out.: 49 mm / 1 15/16" - 130 mm / 5 2/16" - 24 mm / 15/16"
3. Electrical connections: 156 mm / 6 2/16" - 211 mm / 8 5/16"

## Technical Information

| | |
|---|---|
| Production in 24h | 29 kg |
| Store capacity, up to | 10 kg |
| Cooling system | A - W |
| Kind of cube | A-18g, C-33g, D-13g |
| Refrigerant | R290 |
| Standard voltage | 230 V ~ 50 Hz |
| Average power consumption | 320 W |
| Fuse | 10 A |
| Electrical consumption | 30 kWh / 100 kg |
| Water consumption | A: 5 l/kg - 60 gal/100 lbs<br>W: 12 l/kg - 144 gal/100 lbs |

| | | |
|---|---|---|
| Sizes | (L-P-H mm) | 390 - 460 - 690 |
| | (L-P-H in) | 15 6/16 - 18 2/16 - 27 3/16 |
| Sizes with pack | (L-P-H mm) | 440 - 520 - 880 |
| | (L-P-H in) | 17 5/16 - 20 8/16 - 34 10/16 |
| Net weight | | 37 kg / 82 lbs |
| Gross weight | | 44 kg / 97 lbs |
| Finish | | AISI 304 stainless steel, scotch brite |

**All the technical information must be considered at the following conditions:**

- Sizes without feet
- Standard Cube (18g)
- Ambient temperature +21°C
- Water temperature +15°C
- Electrical consumption at +32°C (standard voltage)
- Average power consumption at +43°C (standard voltage)


For additional information contact our Sales Team on

T: **0345 130 8070** E: **sales@maidaid-halcyon.co.uk** or visit **www.maidaid.co.uk**



Maidaid reserve the right to alter specifications & dimensions without prior notification, all dimensions will be +/- 3mm.