cube icemaker

M22-5 HC



maidaid by BREMA Ice Makers



M22-5 HC Features

- **3 year warranty**
- Compact and crystal cube
- AISI 304 SS Scotch Brite finish
- Tropical class +43°C
- Cleanable antiscale filter
- Air cooling system
- Easy cleanable internal rounded surfaces
- HCFC-Free insulated storage
- RoHS Free
- Disappearing insulated door
- Soft touch power switch
- Patented sprayer slide
- HFC Free
- Automatic Washing system

Available ice cube size

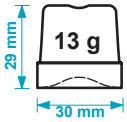

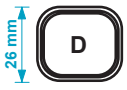


Cleanable antiscale filter


Disappearing insulated door


Patented sprayer slide

Self-contained ice maker – Sprayer system

Daily production up to **23 kg**

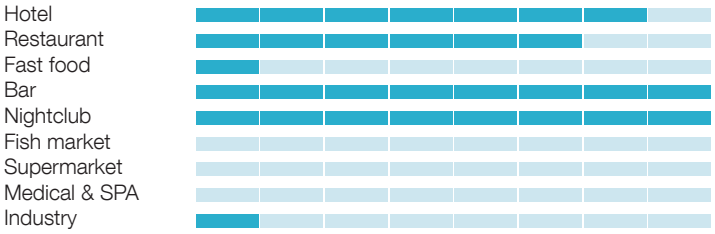

Prod. 24	Air temp.		Water temp.		kg	lbs
	10°C	50°F	7°C	45°F	23	51
	21°C	70°F	15°C	60°F	21	46

For additional information contact our Sales Team on

T: **0345 130 8070** E: **sales@maidaid-halcyon.co.uk** or visit **www.maidaid.co.uk**

Maidaid reserve the right to alter specifications & dimensions without prior notification, all dimensions will be +/- 3mm.

cube icemaker

M22-5 HC



maidaid by BREMA Ice Makers

Working Conditions

• Location: **Indoor**	**Min**	**Max**
Ambient temperature	+10°C / +50°F	+43°C / 110°F
Water temperature	+3°C / +37°F	+32°C / +90°F
Voltage	-10%	+10%
Water inlet pressure	1bar (14 psi)	6bar (84 psi)

Performances

		Water temperature					
		7°C	**45°F**	**15°C**	**60°F**	**21°C**	**70°F**
Air temperature	**10°C**	23 kg					
	50°F		51 lbs				
	21°C			21 kg			
	70°F				46 lbs		
	32°C					16 kg	
	90°F						35 lbs

Installation Diagram

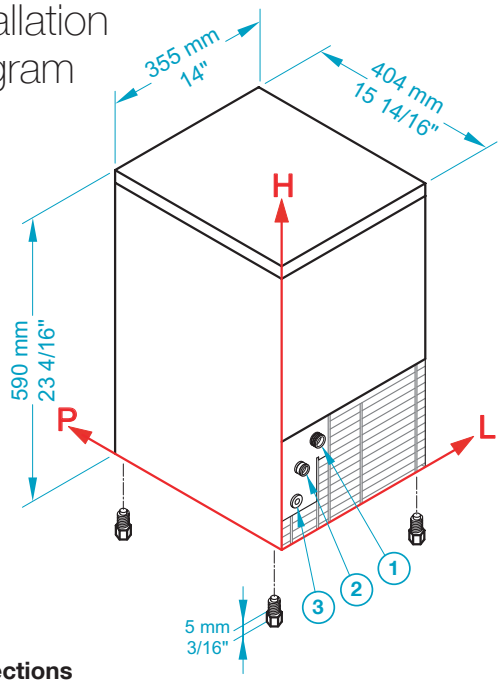

Connections

All measures are referred to the rear bottom-left corner (L-H-Ø)

① Water in.: 88 mm / 3 7/16" - 184 mm / 7 4/16" - 3/4"
② Water out.: 45 mm / 1 12/16" - 138 mm / 5 7/16" - 24 mm / 15/16"
③ Electrical connections: 41 mm / 1 10/16" - 73 mm / 2 14/16"

Technical Information

Production in 24h	21 kg / 46 lbs
Store capacity, up to	4 kg / 9 lbs
Cooling system	A
Kind of cube	D-13g
Refrigerant	R290
Standard voltage	230 V ~ 50 Hz
Average power consumption	260 W
Fuse	10 A
Electrical consumption	35 kWh/100 kg
Water consumption	A: 4 l/kg - 48 gal/100 lbs

Sizes	(L-P-H mm)	355 - 404 - 590
	(L-P-H in)	14 - 15 14/16 - 23 4/16
Sizes with pack	(L-P-H mm)	415 - 445 - 780
	(L-P-H in)	16 5/16 - 17 8/16 - 30 11/16
Net weight		27.5 kg / 61 lbs
Gross weight		34 kg / 75 lbs
Finish		AISI 304 stainless steel, scotch brite

All the technical information must be considered at the following conditions:

- Sizes without feet
- Standard Cube (13g)
- Ambient temperature +21°C
- Water temperature +15°C
- Electrical consumption at +32°C (standard voltage)
- Average power consumption at +43°C (standard voltage)

For additional information contact our Sales Team on

T: **0345 130 8070** E: **sales@maidaid-halcyon.co.uk** or visit **www.maidaid.co.uk**

Maidaid reserve the right to alter specifications & dimensions without prior notification, all dimensions will be +/- 3mm.